Introduction of Celex Family Sensor and Event/Frame/Optical-flow Hybrid Processing

Shoushun Chen

CelePixel Technology Co. Ltd

Jun 2019

Event-based Sensor

"Passive" pixel

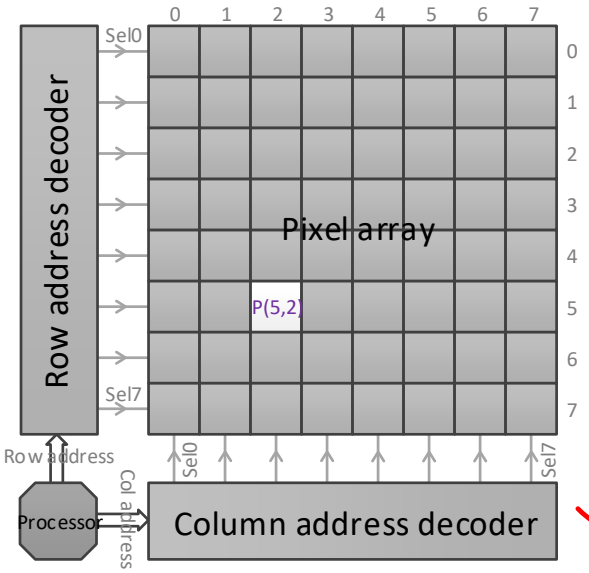

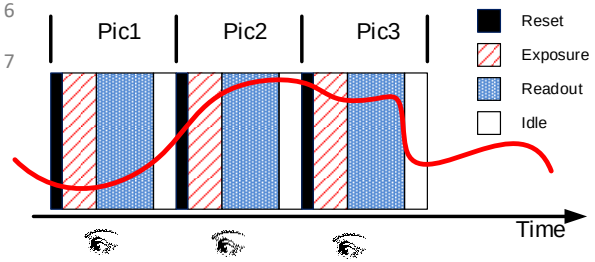

● frame ● framerate (fps)

"Active"Pixel

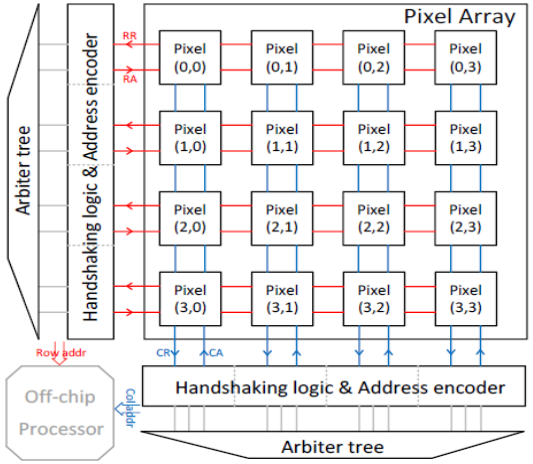

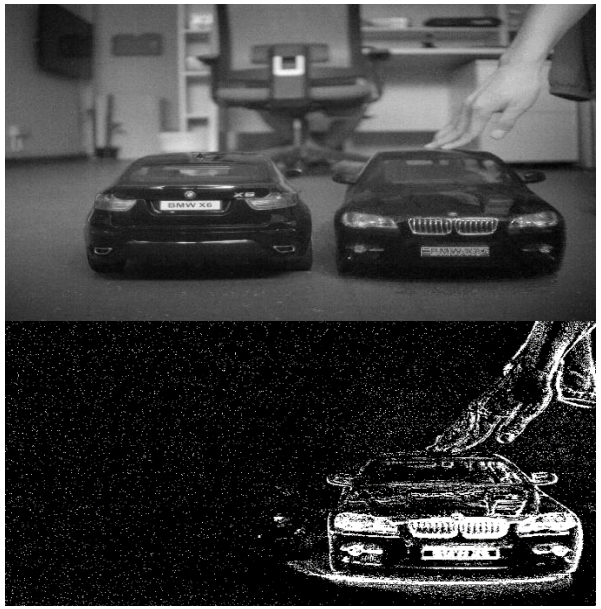

Frame-based Sensor

- Strive for higher resolution/FPS/ contrast rate
- Complex algorithm to process sets of static pics
- Huge amount of redundant data when nothing moves

Event-based Sensor

- **Parallel Event-based readout:** nothing moves, nothing comes out
- **Video and signal compression:** unique decode and sampling mechanism
- **Timestamp in each spike:** to track motion and time/space 3D domains

	Frame-based Sensor	Event-based Sensor
Data rate	Gp/s ,redundancy	Mp/s ,spot of interests
Response	Millisecond	Nano sec
Frame	More FPS on motion	No frames, continuous
Prediction	Large data points	Ultra efficient
Process	Complex, bulky	Process in stream
Cost	High computational resources	Very low in computation/storage

History

2011 CeleX I 64x64

2015 CeleX II 192x160

2015 CeleX III 384x320

2016 CeleX IV 768x640

2018 **CeleX V 1280x800**

2019 CeleX VI

2015 **Hillhouse Technology Incorporated at Nanyang Technological University, Singapore**

Relocated to Shanghai

cele pixel

2017 **Pre-A Investment led by Baidu Ventures**

Baidu.ventures 百度风投

2018

- **Co-op in SG, SH,**
- **40 employees**
- **>20 algorithm engineers**

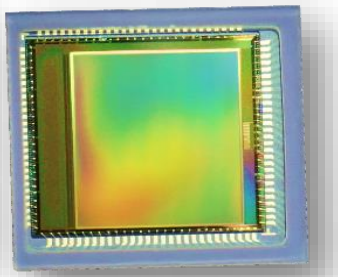

CeleX Sensor Introduction

- New Event Packet format: (X,Y,T) or (X,Y, P, T)

  → (X,Y, A,T)

  A == (in-pixel time-stamp) or
  (pixel logarithmic grey level value)

- Fully explore spatial-temporal information:

  Appearance Model + Motion Model

- In-pixel time stamp:

  accurate, free of readout jitter/delay

- On-chip optical flow: frame-like output

- Hybrid processing: multi-mode auto-cycling

  full-picture → event → optical flow

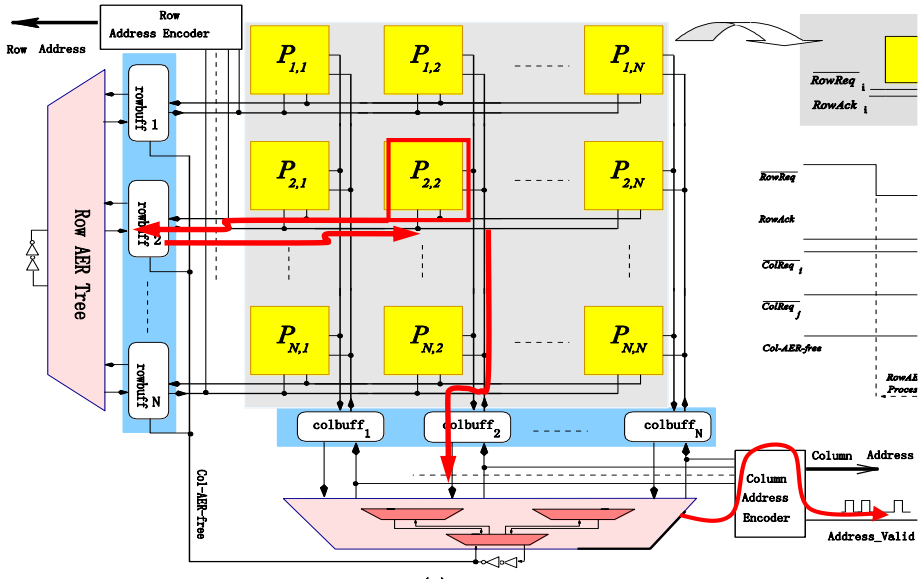

(X,Y,T) or (X,Y, P,T)

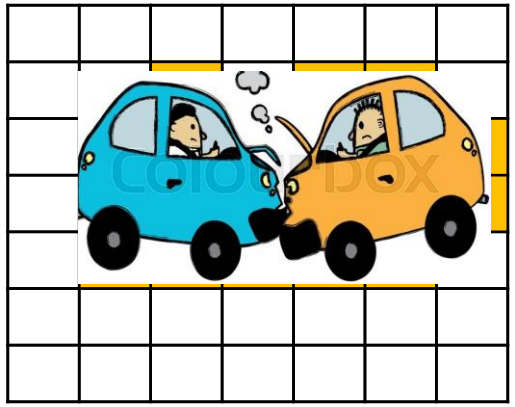

CeleX-Family Sensors

	CeleX-IV	CeleX-V
Resolution	768 x 640	1280 x 800
Process	0.18um	65nm (Automotive qualified)
Pixel Size	18 x 18 um	9.8 x 9.8 um
Latency	<0.5us	<0.5us
Max Readout	200 MEPS	100 MEPS
Output Signal	Motion mode (in/off pixel time-stamp) Picture mode Optic Flow mode	
Dynamic Range	Motion mode > 120dB Picture mode > 120dB	
Uniqueness	1) Picture mode use logarithmic direct readout; no need exposure time, (X,Y,A,T) event packet; (A) and (T) always matched; High dynamic range. 2) On-chip optical flow 3) In-pixel time-stamp	

Pixel Introduction

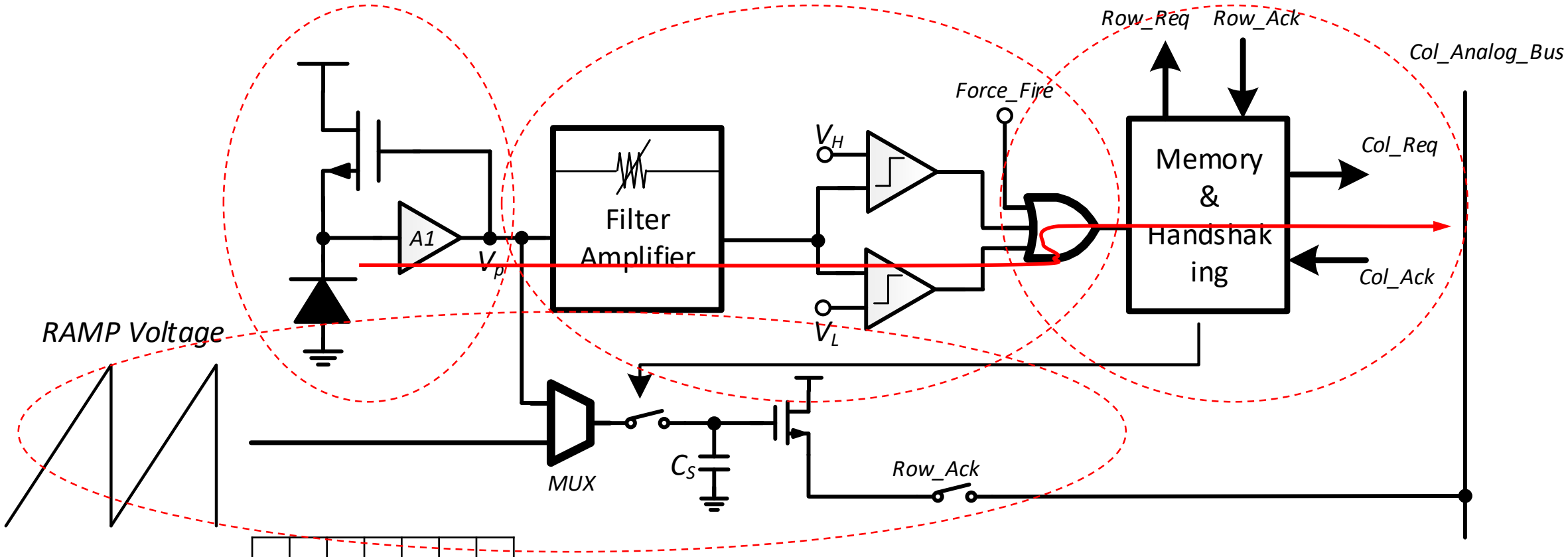

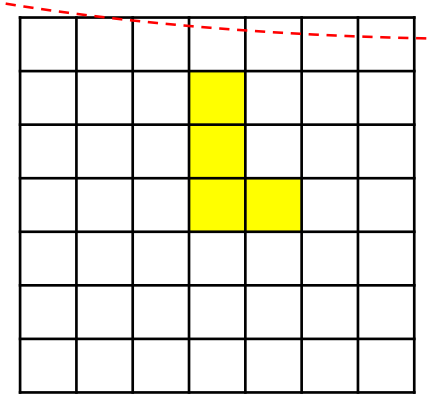

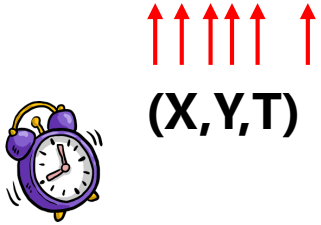

- **Scanning vs AER**
  - **Encoding**
- **Jitter/Delay**
  - **high readout speed**
  - **In-pixel time-stamp**

Pixel Operation –Grey Level Value (X,Y,A,T)

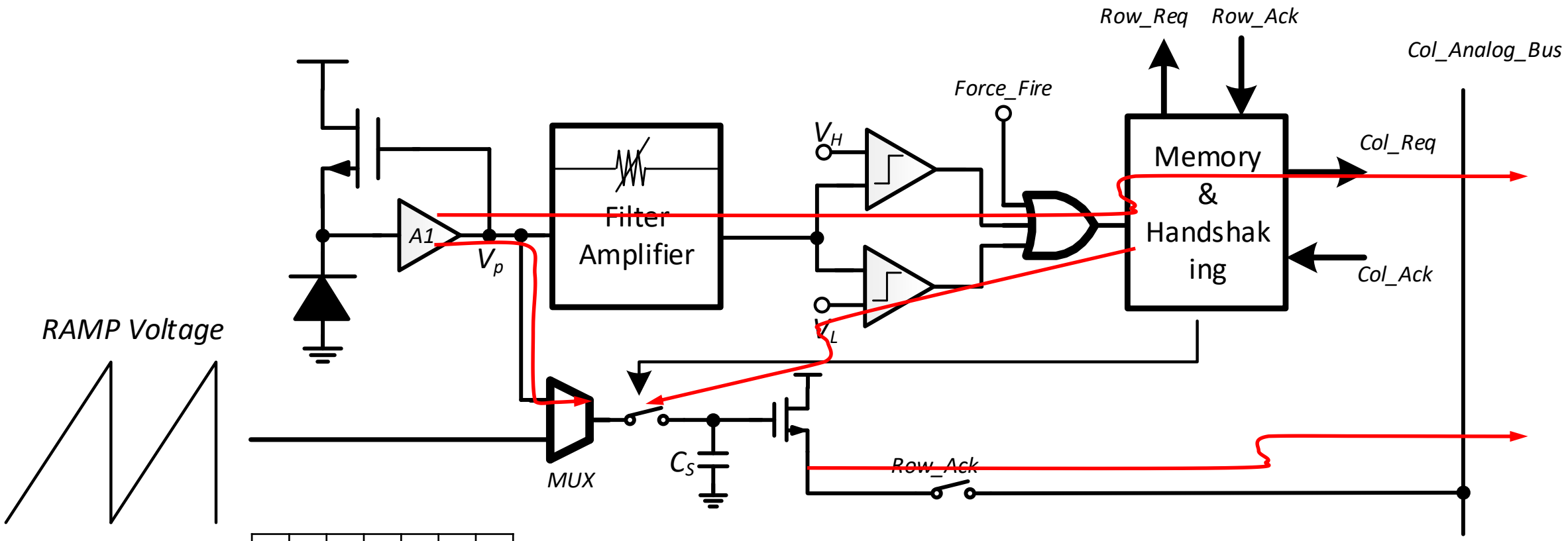

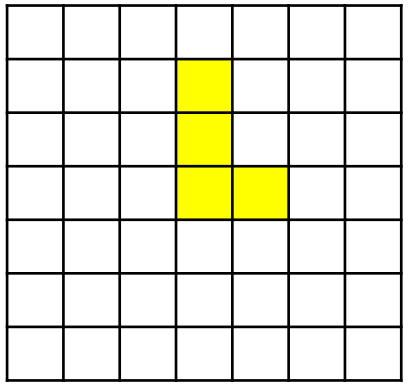

(X,Y,A,T)

- Global-shutter full-picture can be obtained by Force-fire signal

Pixel Structure –In-pixel Time Stamp

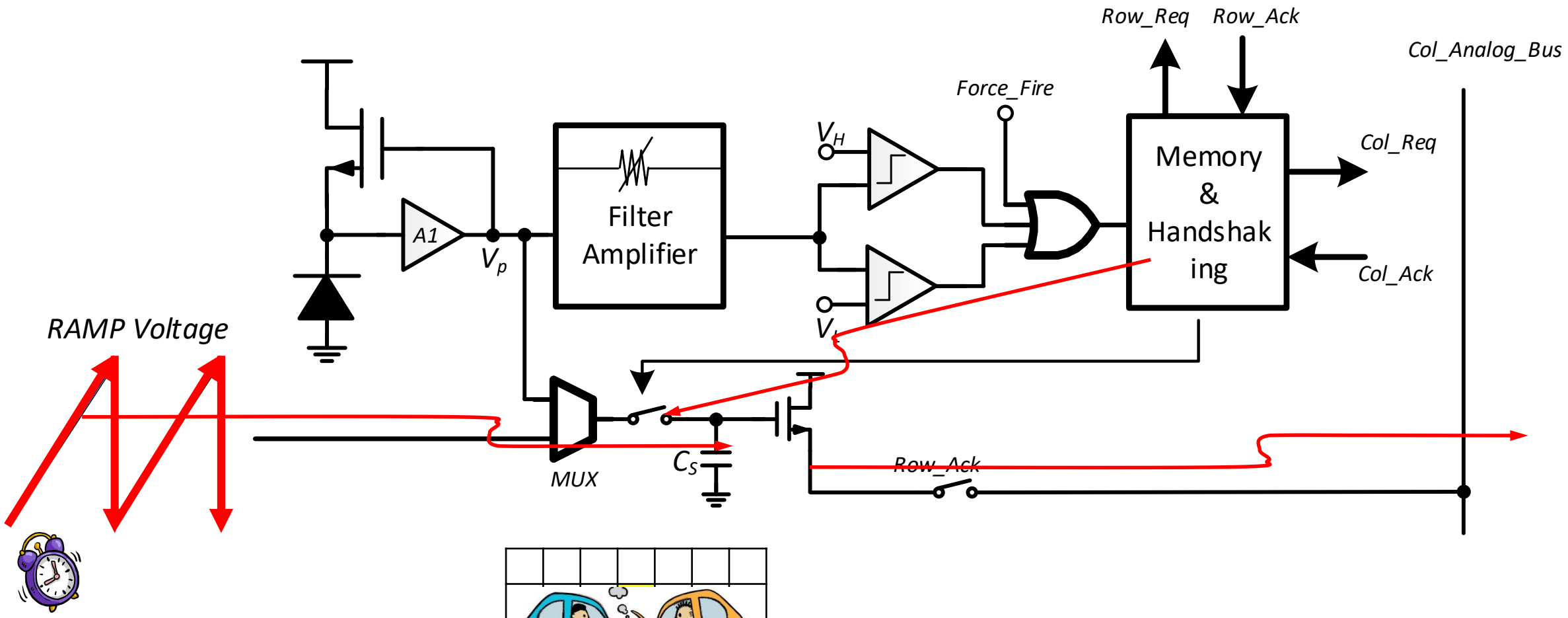

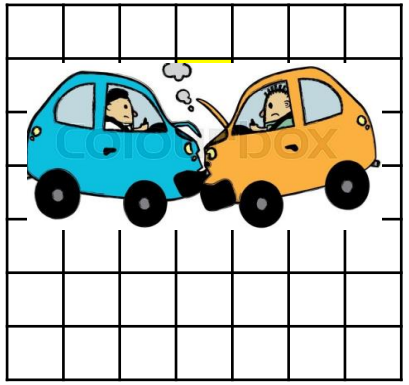

In-pixel Time Stamp vs off-pixel Time Stamp

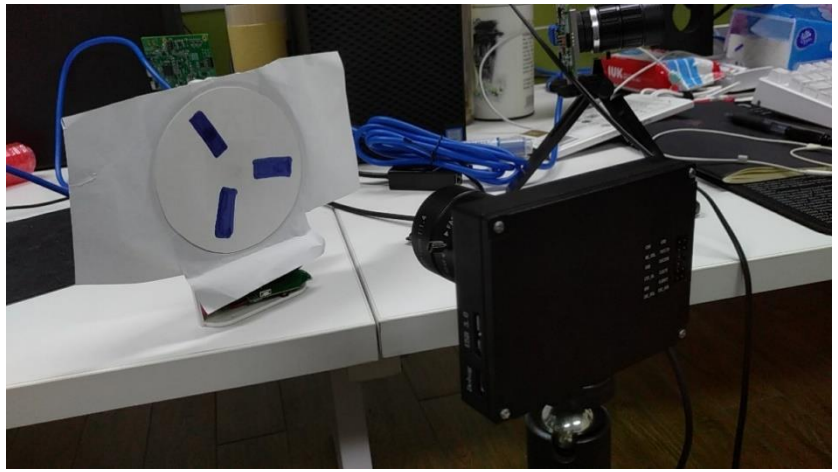

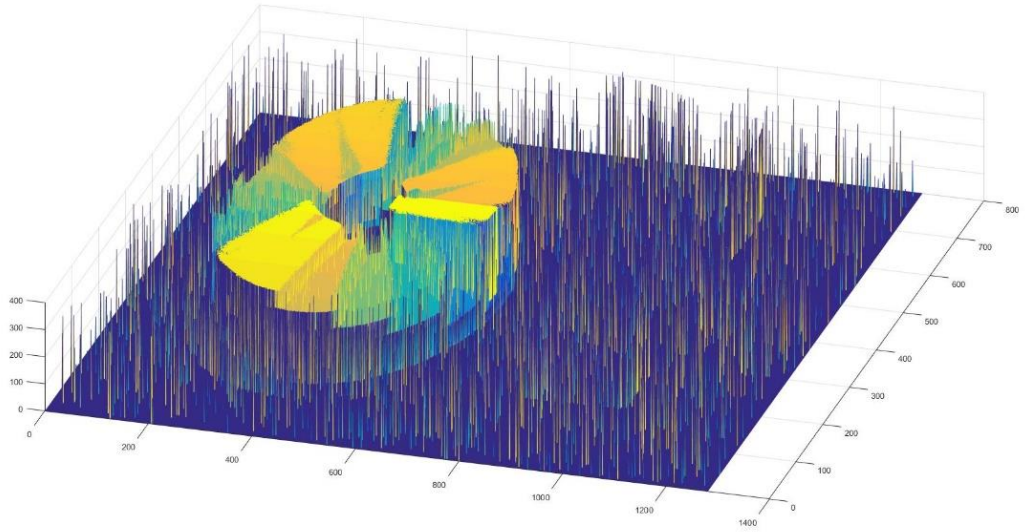

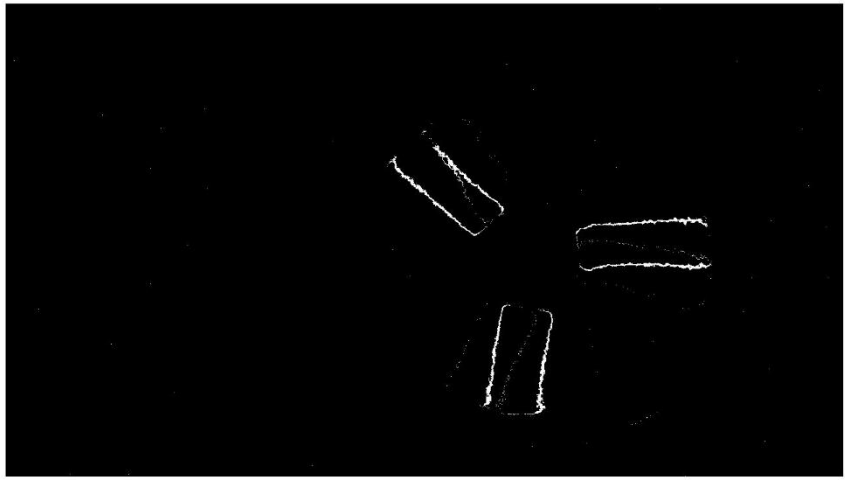

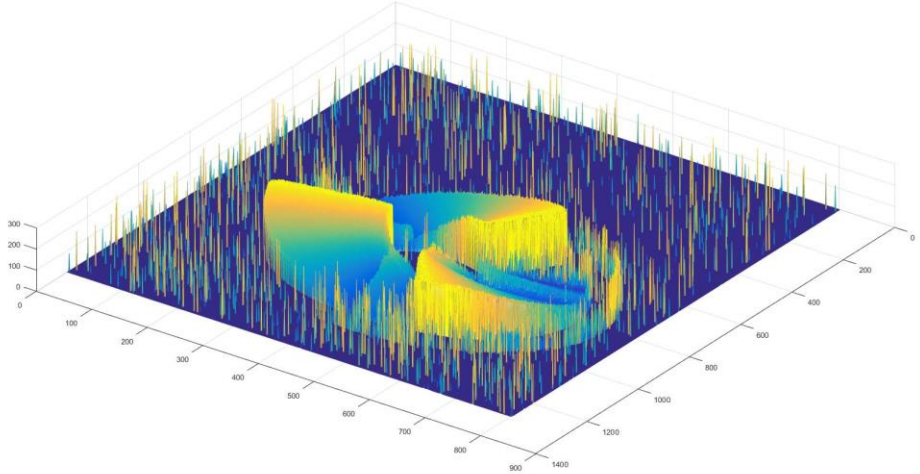

Pixel Structure –Optical Flow

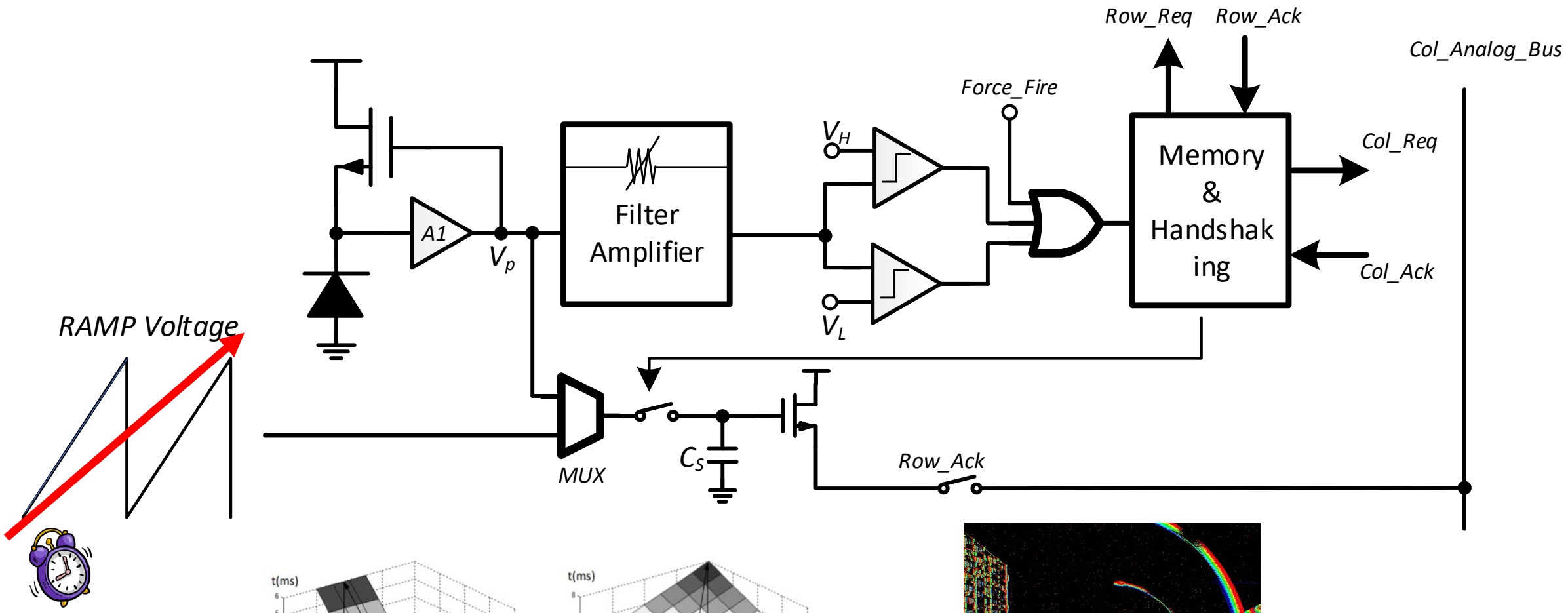

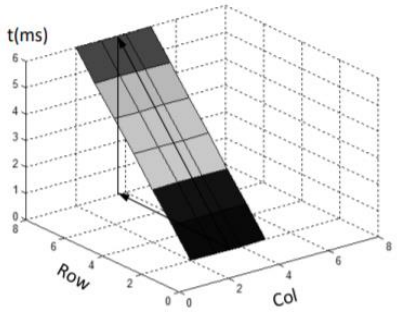

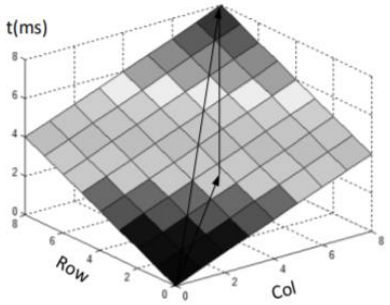

Rise of a New Era of Computation Vision










Our Efforts on Processing

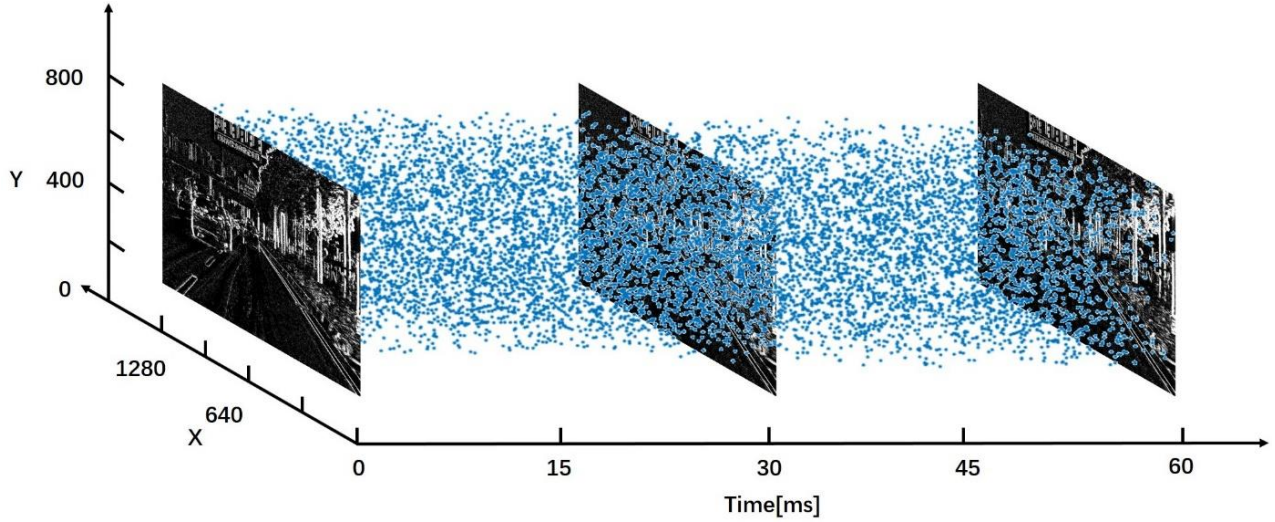

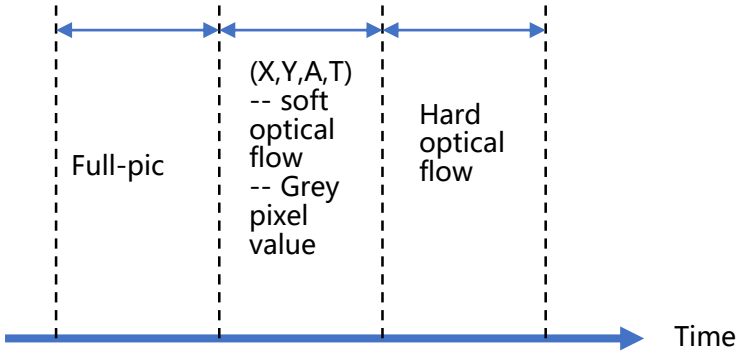

Hardware Auto-Looping

Picture Mode

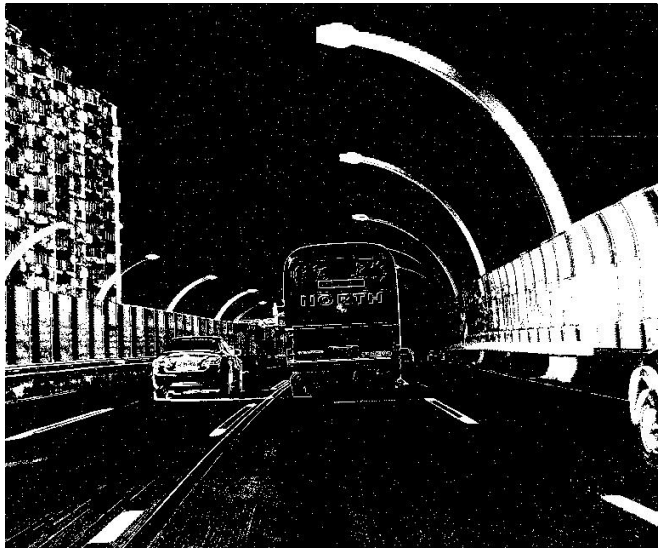

Event Mode

Optical Flow Mode

Contact US

For Job application: hr@celepixel.com

-- AI

-- Computer-Vision

For sample evaluation: bd@celepixel.com